Food Service Facility Requirements

FACILITY PLANNING

___**State Approved Plans**: Buildings >50,000 cubic feet must have plans prepared by an architect or engineer. Plans for buildings that are >25,000 cubic feet must be submitted to The Department of Commerce. Plans for buildings <25,000 cubic feet do not need to be submitted to Dept. Of Commerce; however, all state requirements are applicable. Contact the Local or State Department of Commerce building inspector to determine if you need state approved plans. In the City of Wausau contact the Inspections Department.

___**Well and Septic:** Wells must meet DNR codes. Septic systems must meet the Department of Commerce codes. Contact the Health Department for information about existing facilities. For new construction contact a licensed plumber and licensed well driller. Be sure the plumber is informed about future kitchen and seating expansion plans so he can size the septic system accordingly. This will avoid unnecessary expense in the future.

___**Smoking Sections**: Seating for >50 patrons requires a separate smoking section.

___**Restrooms**: Public restrooms must be provided when seating is available and in "carry-out" only facilities. The number of fixtures in each restroom depends on the seating capacity of the restaurant. Restaurants that have seating for 15 patrons or less and "carry out" facilities need only provide one unisex restroom. All new or remodeled restrooms must be handicapped accessible. All restroom fixtures must be commercial. A third unisex family restroom may be required for restaurants which seat over 300 patrons. Customer restrooms must be located near the customer area and doors cannot open into a food preparation, storage, or serving area. An employee restroom may be required for walk-up or food court facilities. Check with the Dept. Of Commerce for these requirements.

___**Zoning:** Check with the Marathon County or the City of Wausau Zoning Departments to be sure the property is zoned for a food service facility.

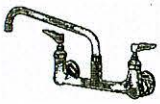

PLUMBING

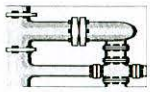

___**Utensil Washing**: Most facilities require at least a 3-compartment sink with drainboards. Many facilities will require a 4-compartment sink to allow for pre-washing. Strainer baskets are required on drains. A commercial dishwasher and a prewash sink may be installed instead of the three or four compartment sink. Garbage grinders must be commercial and installed by a licensed plumber to assure proper back flow protection is installed.

___**Handwash Sinks**: Handwash sink faucets must be foot, knee, or wrist operated. Hand sinks are required adjacent to the utensil wash sinks or dishwasher. They are also required in all food preparation areas. Check with the Health Department to determine what areas.

___**Food Preparation Sink**: An air gapped food preparation sink must be provided when food will be set directly, or in a strainer, inside of the sink. This is usually done to wash fruit and vegetables, pre-chill hot foods, or to quick thaw foods under running water. Your type of food service will need to be discussed with the Health Department to determine if this requirement can be waived.

___**Mop Sink:** All new restaurants must have a utility/mop sink.

___**Grease Interceptor**: When grease producing foods are prepared, a grease interceptor must be provided. Facilities on public sewer require an interior or exterior interceptor. All private sewage systems require an exterior grease interceptor. Consult with a licensed plumber to properly size and locate the grease interceptor.

___**Hot and Cold Potable Water**: All sinks must be provided with hot and cold potable water under pressure through a mixing valve faucet.

___**Plumbing Plans**: Plumbing plans must be approved, and can be obtained through a licensed plumber.

PERMITS NEEDED

___**Food Service Facility Permit**: A permit must be issued by the Health Department prior to opening for business. This permit expires June 30th of each year and must be renewed on or before June 30th. **(A Health Department permit is also required for taverns not serving food.)** The permit must be posted for public view.

___**State Certification**: Each restaurant must employ a State Certified restaurant operator or manager. The certification must be displayed for the customers to see. Contact the Health Department for further information.

___**Contact the city/town clerk to find out about any additional permits needed.**

INSPECTIONS

___**Advisory Consultations and Plan Reviews**: Advisory consultations and plan reviews help the future operator develop a code complying facility. This is especially recommended prior to purchasing an existing facility. Call the Health Department to request one. Advance notice is required.

___**Pre-inspection**: A pre-inspection is conducted immediately prior to the date the facility opens. The application for permit is completed at this time. A one time pre-inspection fee and the yearly permit fee are both collected during the pre-inspection.

___**Regular Inspections**:
Regular inspections are completed annually or as often as necessary to ensure compliance with Wisconsin Food Codes.

___**Follow-Up Inspections**: Follow-up inspections are conducted to allow the operator time to comply with violations cited during the regular inspection. The operator may be assessed a fee for any additional follow-up inspections needed after the first follow-up inspection.

Note: Violations that are an immediate danger to public health, must be corrected immediately.

FLOORS - WALLS - CEILINGS

(Food preparation, food storage, & utensil wash areas as well as restrooms)

___**Floors**: Floors must be smooth and cleanable. Commercial tile or vinyl flooring, or ceramic tile are approved floor coverings. An approved coved base of impervious materials is required at the floor/wall juncture. Wood is not allowed.

___**Walls & Ceilings**: Walls and ceilings must be smooth, light colored, and cleanable. Glasbord, marlite or wallboard painted with non-absorbent enamel are approved. If using tile grid ceiling, only ceiling tiles made for commercial kitchens and restrooms are approved. **No acoustical ceiling tile will be allowed in these areas.**

VENTILATION

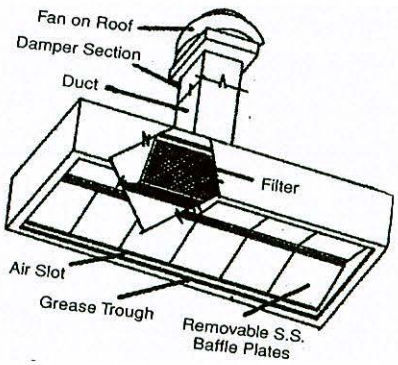

___**Vent Hood/Grease Filters**: An approved vent hood with grease filters and a fire suppression system is required over all grease producing equipment.

___**Restroom Ventilation**: An exhaust vent must be provided in all restrooms.

LIGHTING

___**Protection From Breakage**: All light bulbs or tubes must be protected by a shield or special coated bulbs in food preparation areas, storage areas, coolers or freezers and retail areas with un-wrapped food items.

___**Brightness**: For new and remodeled facilities, footcandle readings are taken after lighting is installed. Adjustments may be needed to comply with Dept. of Commerce minimum requirements. Existing facilities may need additional lighting as well.

FOOD SUPPLIES

___**Wholesome and Approved Source**: All food supplies must be wholesome and obtained from sources that comply with all laws relating to food and food labeling.

___**Safe Temperatures**: Hot foods must be held at 140EF or higher and cold foods must be held at 41EF or lower.

___**Safe Storage**: Food must be stored off the floor at least 6 inches on smooth nonabsorbent shelving. Wood shelving can only be used for dry storage and must be painted, or otherwise sealed. Food must not be stored under sewer or water lines.

EQUIPMENT

___**Approved**: All equipment must meet commercial food equipment standards. It is recommended that all equipment be purchased from a commercial restaurant equipment supplier. Call the Health Department if you have questions prior to the purchase of used or new equipment.

___**Thermometers**: Provide accurate thermometers in all refrigeration and freezer units. Provide probe thermometers to take food temperatures.

___**Commercial Refrigeration**: All refrigeration must be commercial and capable of holding food at 41E F or less. Walk-in coolers must be lined with glasbord, aluminum, galvanized metal, or stainless steel and have sealed cement, ceramic, or metal flooring (no wood).

___**Freezers**: Freezers used to freeze non-frozen products must be commercial. Products which are purchased frozen may be stored in a noncommercial freezer.

___**Cooler Shelving**: Refrigerator and freezer shelving must be approved open wire or other non-absorbent material that allows air flow (no wood).

OTHER CONSIDERATIONS

___**Restaurant Plan Approval**: To prevent having to add items, or change things that are improperly installed, a drawn plan should be submitted to the Health Department for review prior to beginning construction or remodeling. Some private restaurant supply companies have trained staff that can draw up a plan for little or no fee. Their experience at effective use of space can often be a cost savings and promote efficient food production.

___**Health Department Sanitarian**: The information in this pamphlet contains general requirements. Contact the Health Department Sanitarian assigned to the facility to ensure all requirements are being met.

Marathon County Health Department
1000 Lake View Drive, Ste 100
Wausau, WI 54403-6786
TEL. & TDD (715) 261-1900
FAX (715) 261-1901