NORTHERN METAL AND ROOFING

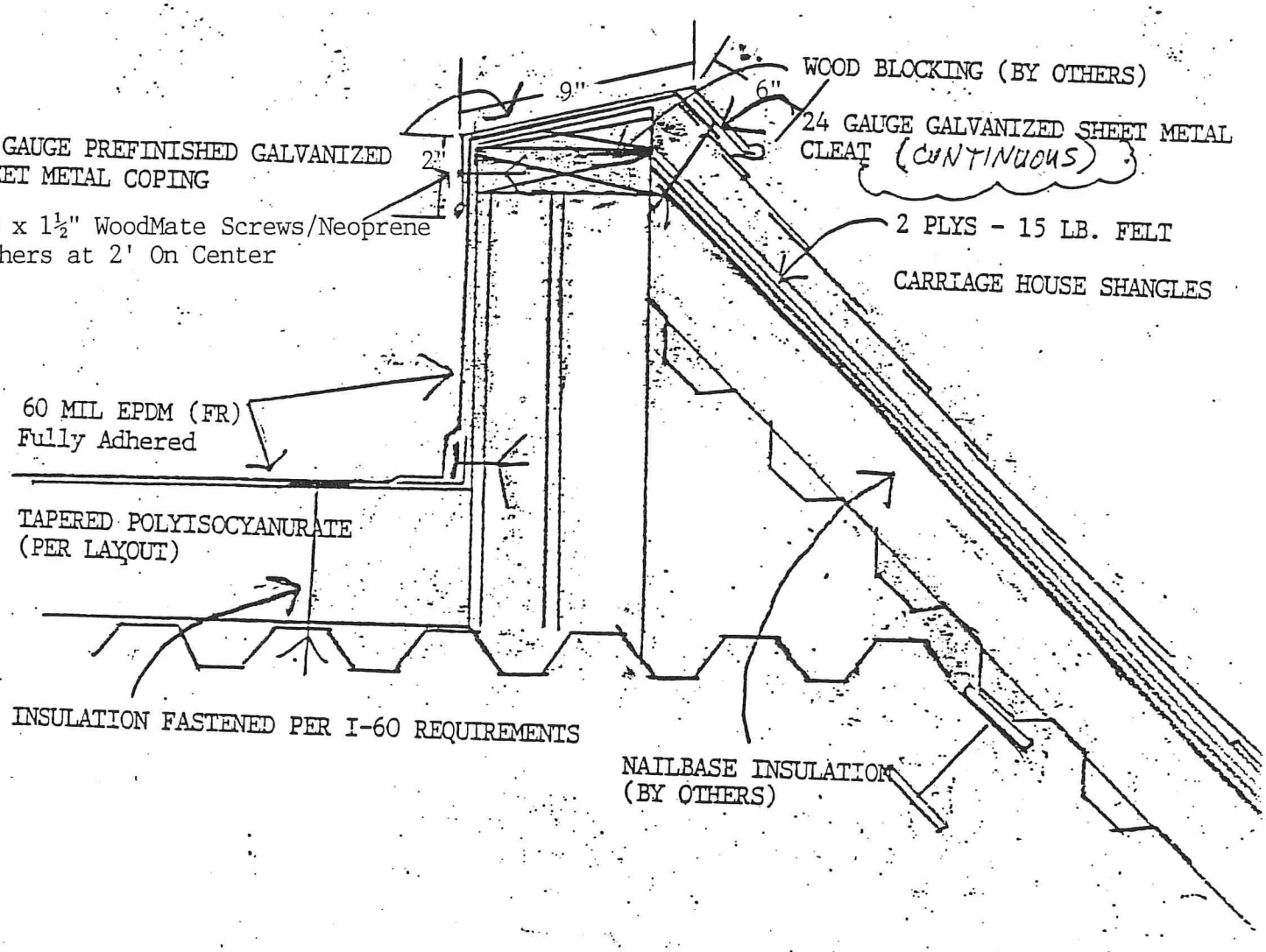

Marathon County Public Library - Roof Edge Detail #1 (REF 1A36)

SMACNA PLATE 43

Roofing & Architectural Sheet Metal Specialists
1500 RADISSON ST. — GREEN BAY, WI 54302 — AREA 414-432-7719

NORTHERN METAL AND ROOFING

Marathon County Public Library - Roof Edge Detail #2 (REF 2A36)

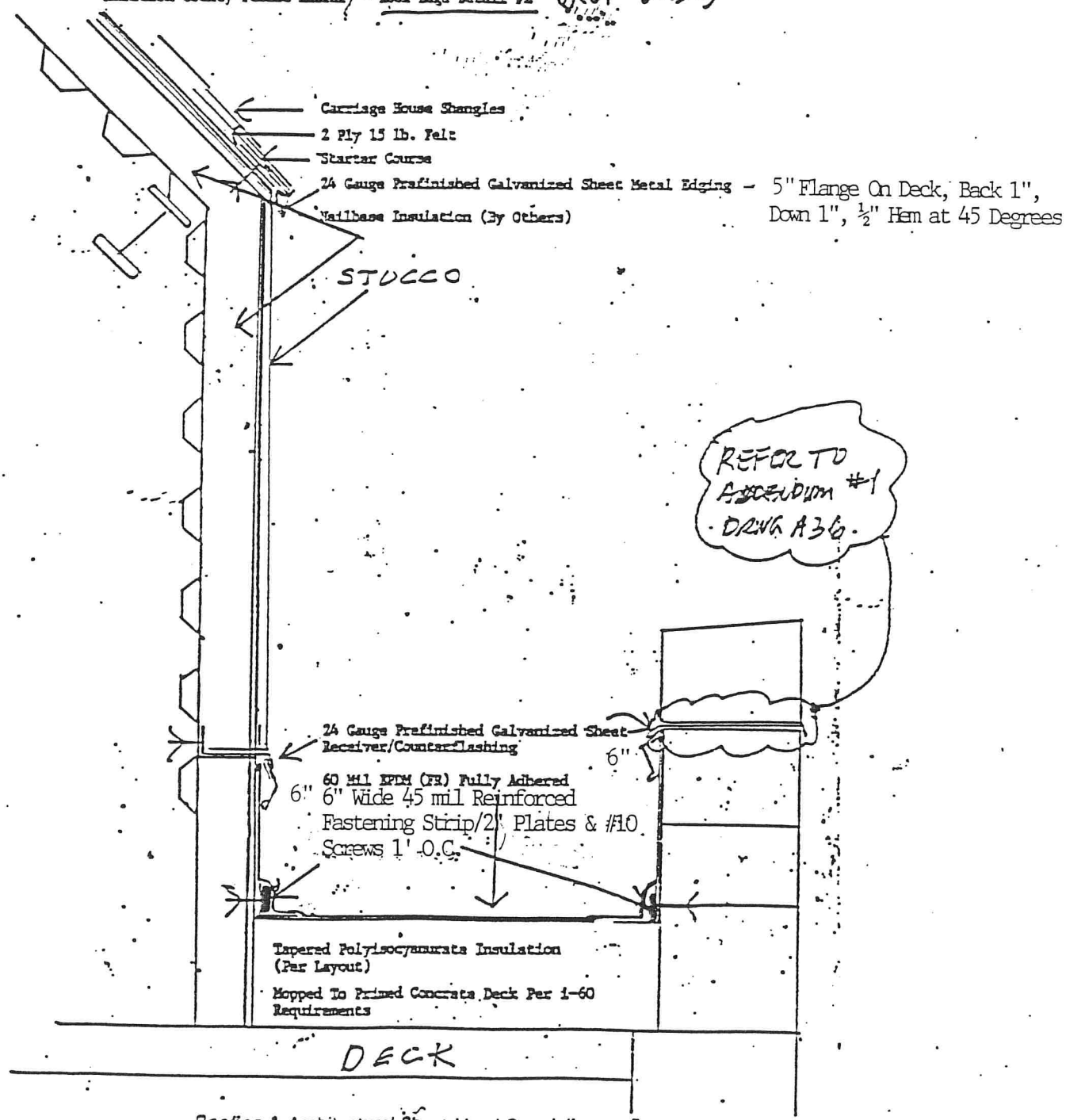

Roofing & Architectural Sheet Metal Specialists
1500 RADISSON ST. — GREEN BAY, WI 54302 — AREA 414-432-7719

NORTHERN METAL AND ROOFING

The review of this drawing specification, sample, or other document is for conformance [illegible] concept of the Project [illegible] the approved [illegible] the [illegible] Document [illegible] review does [illegible] requirements [illegible] compliance with the approved Contract Documents [illegible] trade contractor/supplier. All [illegible] control remains the responsibility of the trade contractor/supplier.

- [x] Reviewed
- [ ] Reviewed with corrections
- [ ] Returned for corrections, re-submit ____ copies.

Reviewed by: [illegible] Date: [illegible]

Marathon County Public Library - Roof Detail #3 (REF 3A36)

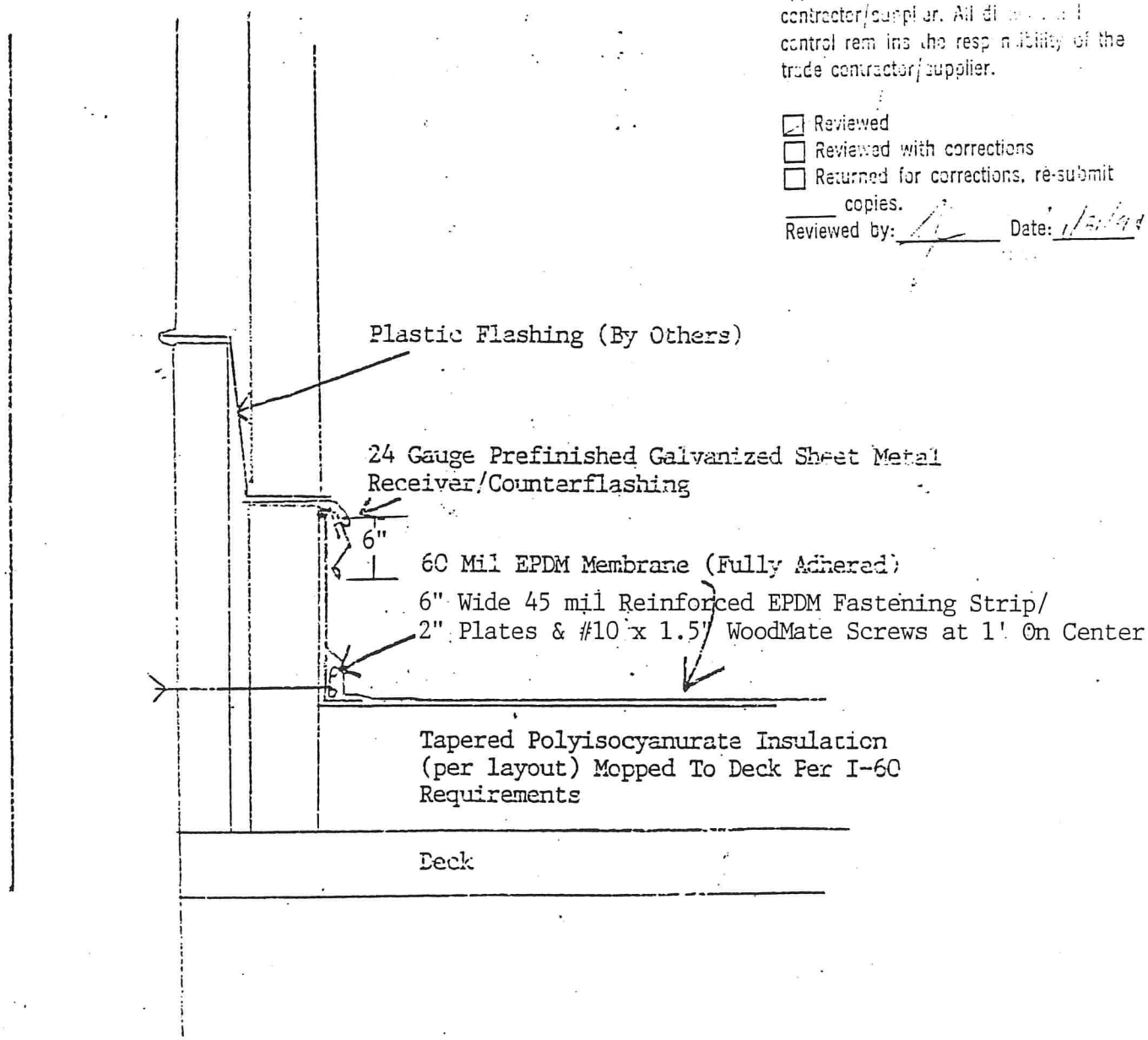

Roofing & Architectural Sheet Metal Specialists
1500 RADISSON ST. — GREEN BAY, WI 54302 — AREA 414-432-7719

NORTHERN METAL AND ROOFING

Marathon County Public Library - Roof Detail #4 (REF 4 A20 SIM 4 B6)

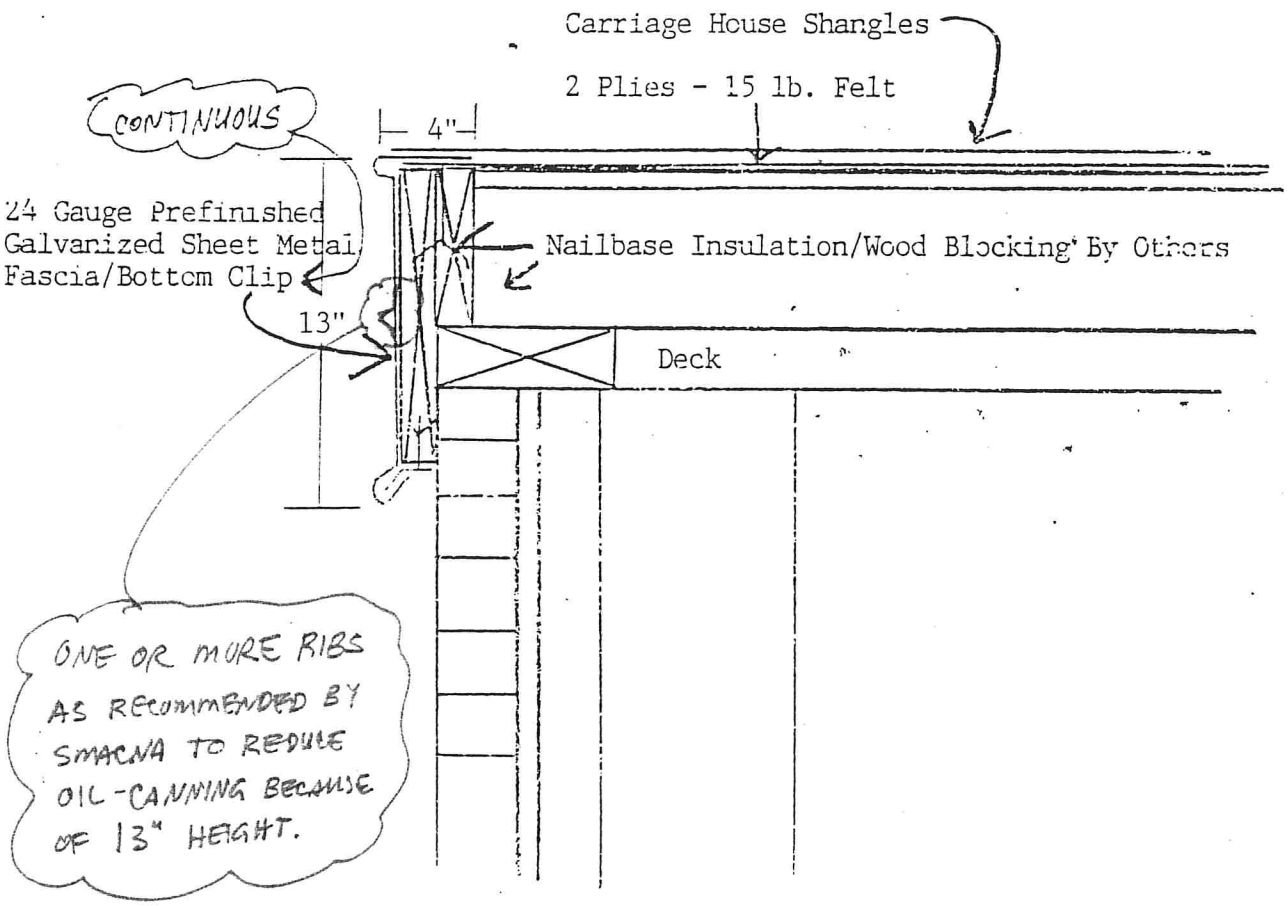

REF SMACNA PLATES 39 & 46

Roofing & Architectural Sheet Metal Specialists
1500 RADISSON ST. — GREEN BAY, WI 54302 — AREA 414-432-7719

NORTHERN METAL AND ROOFING

MARATHON COUNTY PUBLIC LIBRARY - SCUPPER DETAIL

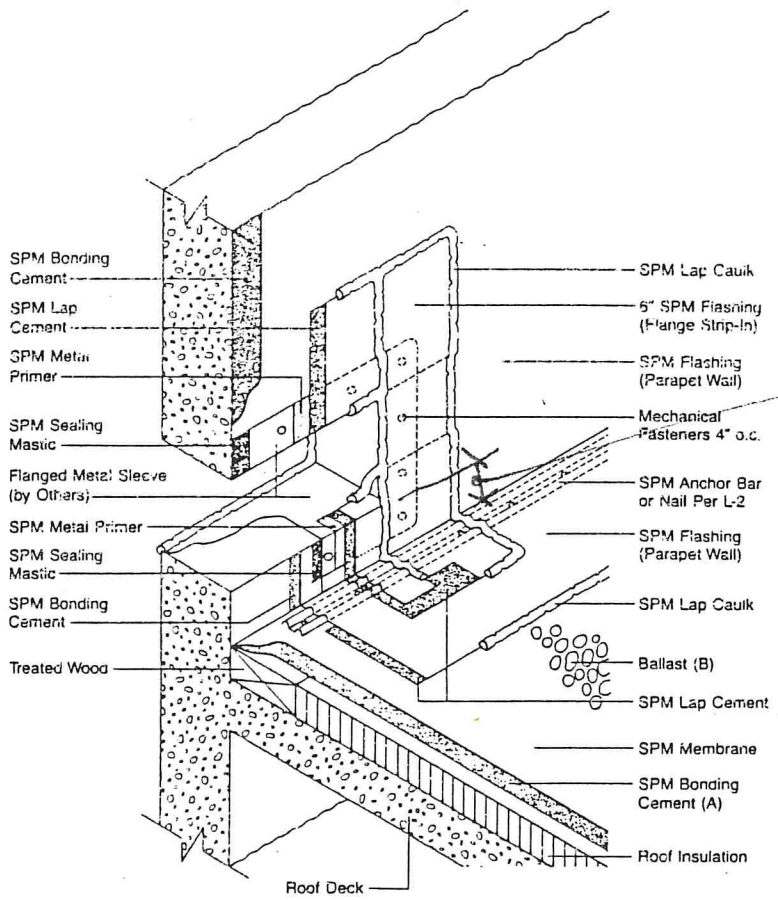

3/4" MAX. LESS IF PERMITTED BY MANVILLE.

Notes:
(A) For Spec SE6A Only. For SE6M Use Same Detail without Bonding Cement

(B) For Spec SE4B and SE6B Only

Use with Appropriate Cap Flashing Detail

Detail Shown for Wall Flashing Applied First. Alternate is to Install Metal Sleeve First and Strip-in to Parapet Wall then Flash over Entire Parapet Wall. This Alternate Would Result in Fewer Exposed Caulked Seams.

Manville SPM® Detail		
OVERFLOW SCUPPER WITH METAL SLEEVE		
Scale NONE	Approved JCB	Drawing No. M-8
Date 9-20-87		
Dwn By RWO		

Roofing & Architectural Sheet Metal Specialists
1500 RADISSON ST. — GREEN BAY, WI 54302 — AREA 414-432-7719

NORTHERN METAL AND ROOFING

MARATHON COUNTY PUBLIC LIBRARY - ROOFTOP UNIT FLASHING DETAIL (TYPICAL)

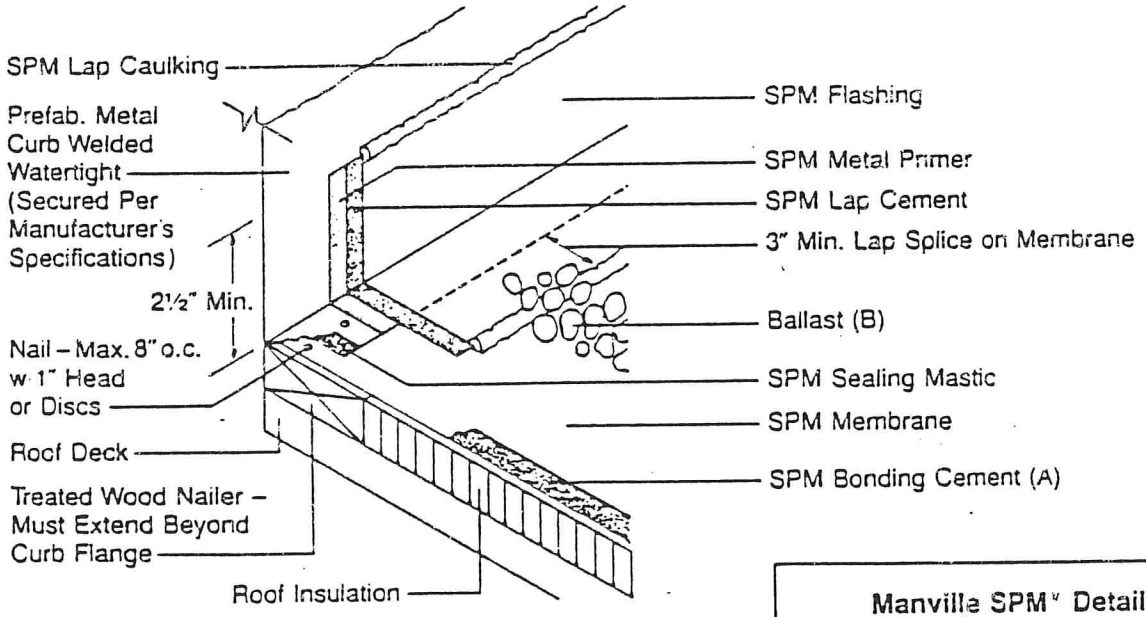

Notes:

(A) For Spec SE6A Only. For SE6M Use Same Detail without Bonding Cement

(B) For Spec SE4B and SE6B Only

Use Appropriate Cap Flashing Detail

Manville SPM™ Detail		
PREFABRICATED METAL CURB FLASHING		
Scale NONE	Approved JCB	Drawing No. B-31
Date 7 30 97		
Dwn By DMB		

Roofing & Architectural Sheet Metal Specialists
1500 RADISSON ST. — GREEN BAY, WI 54302 — AREA 414-432-7719

NORTHERN METAL AND ROOFING

MARATHON COUNTY PUBLIC LIBRARY - APPLIES TO DETAIL 1/A-36

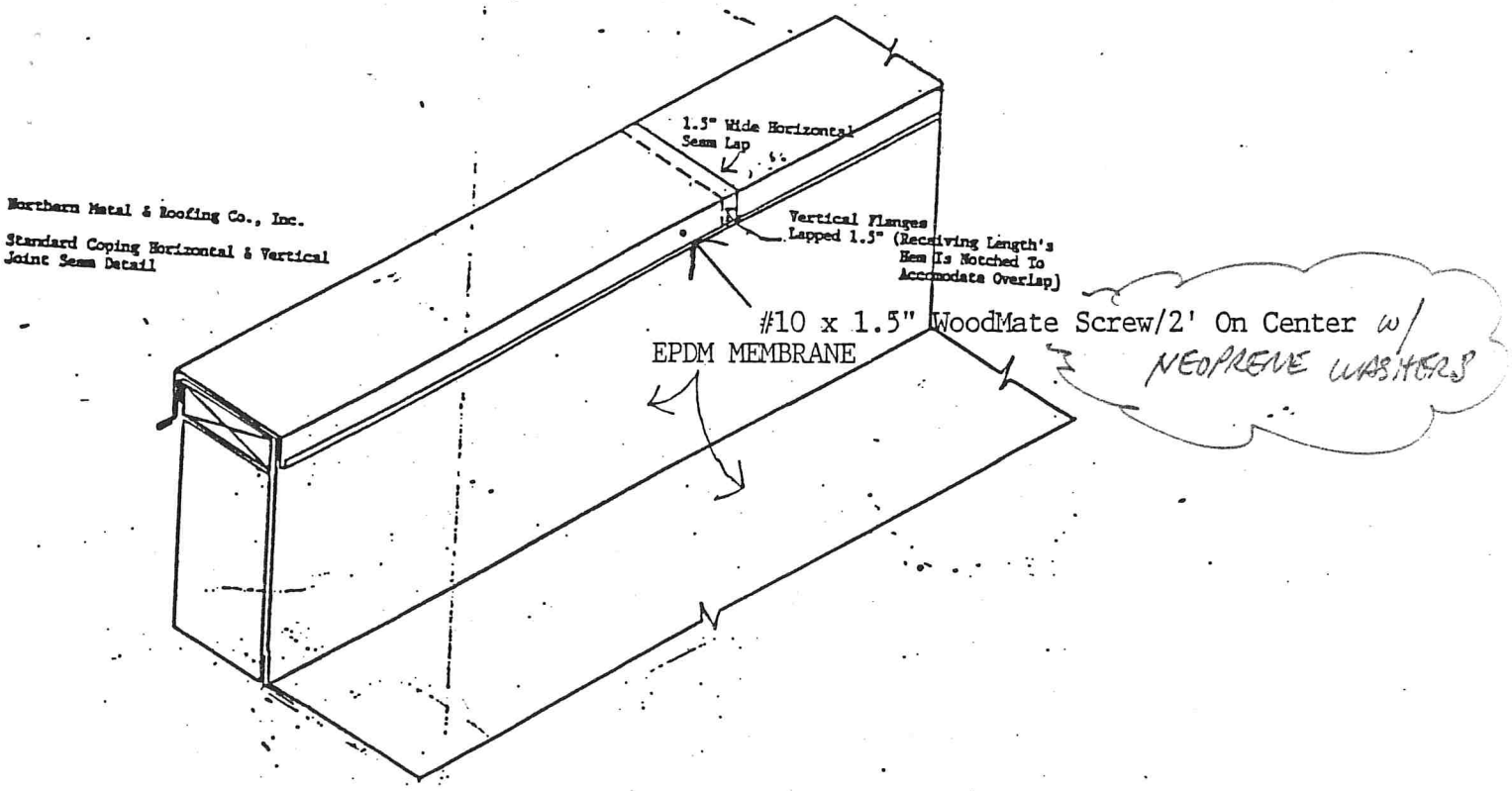

Roofing & Architectural Sheet Metal Specialists
1500 RADISSON ST. — GREEN BAY, WI 54302 — AREA 414-432-7719

NORTHERN METAL & ROOFING COMPANY, INC.

A CUSTOMER DRIVEN COMPANY

Roofing & Architectural Sheet Metal Specialists

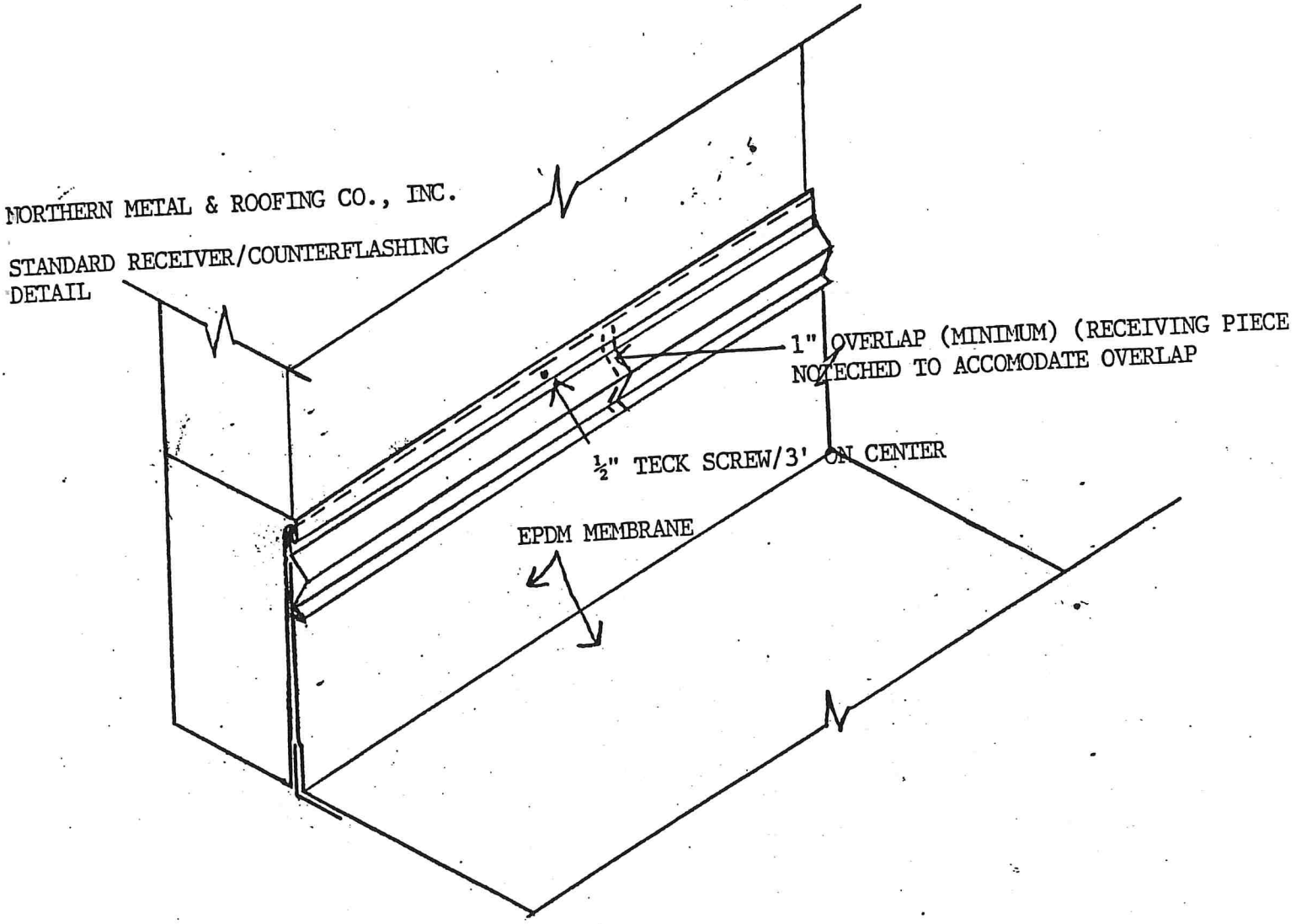

MARATHON COUNTY PUBLIC LIBRARY - APPLIES TO DETAIL 2/A-36

1500 RADISSON STREET • P.O. BOX 8207 • GREEN BAY, WI 54308-8207
414-432-7719 • FAX 414-432-3707