ROOM FINISH SCHEDULE

X = entire room
N = North Wall
S = South Wall
E = East Wall
W = West Wall

ROOM #	ROOM NAME	FLOOR: Carpet Tile	FLOOR: None	FLOOR: Porcelain Tile	FLOOR: Sealed Concrete	FLOOR: Stained Concrete	FLOOR: Walk Off Carpet	BASE: 4" Coved Vinyl	BASE: No base	BASE: None	BASE: Porcelain Tile	WALLS: Glass & Aluminum Frame	WALLS: None	WALLS: Painted Block	WALLS: Painted Block/Concrete	WALLS: Painted Concrete	WALLS: Painted Gypsum Board	WAINSCOT: None	WAINSCOT: Porcelain Tile	WAINSCOT HEIGHT	CEILING: 2x2 Beveled Tegular Edge Acoustic Layin	CEILING: 2x2 Vinyl Wrapped	CEILING: 2x4 Basic Acoustic Layin	CEILING: Paint Exposed Structure	CEILING: Exposed Structure	CEILING: None	CEILING HEIGHT	NOTES
101	VESTIBULE						X	X				SE					NW	X				X						
102	LOBBY	X						X									NSEW	X			X							
103	WAITING AREA	X						X									NSEW	X			X							
104	STAFF CORRIDOR	X						X									NSEW	X			X							
105	DIRECTORS OFFICE	X						X									NSEW	X			X							
106	STAFF CHANGING ROOM			X							X						NSEW	X			X							
107	CHARTING ROOM	X						X									NSEW	X			X							
108	PUBLIC CORRIDOR	X						X									NSEW	X			X							
109	HOUSEKEEPING CLOSET				X			X									NSEW	X					X					
110	IT CLOSET				X			X									NSEW	X					X					
111	MENS LOCKER ROOM					X					X						NSEW	X				X						
112	MENS SHOWER AREA					X					X						NSEW	X				X						
113	MENS DRESSING ROOM					X					X						NSEW	X				X						
114	WOMENS LOCKER ROOM					X					X						NSEW	X				X						
115	WOMENS SHOWER AREA					X					X						NSEW	X				X						
116	WOMENS DRESSING ROOM					X					X						NSEW	X				X						
117	LOCKER CORRIDOR					X					X						NSEW	X				X						
118	CHANGING ROOM A					X					X						NSEW	X				X						
119	CHANGING ROOM B					X					X						NSEW	X				X						
120	CHANGING ROOM C					X					X						NSEW	X				X						
121	CHANGING ROOM D					X					X						NSEW	X				X						
122	CHANGING ROOM E					X					X						NSEW	X				X						
123	EXAM ROOM A					X					X						NSEW	X				X						
124	EXAM ROOM B					X					X						NSEW	X				X						
125	POOL					X					X					NSEW			X	8 - 0				X				
126	CENTRAL UTILITY PLANT CORRID				X				X				W	SE	N			X							X			
127	CENTRAL UTILITY PLANT				X				X					NSEW				X							X			
128	VACUUM PUMP ROOM				X				X					NSEW				X							X			
129	IT ROOM				X				X					NSEW				X							X			
130	EMERGENCY ELECTRICAL				X				X					NSEW				X							X			
131	NORMAL ELECTRICAL				X				X					NSEW				X							X			
132	POOL STORAGE				X				X					NSEW				X							X			
133	POOL EQUIPMENT				X				X					NSEW				X							X			
134	POOL AHU				X				X					NSEW				X							X			
135	GENERATOR AREA (EXTERIOR)		X							X			NSEW					X								X		
136	TRANSFORMER AREA		X							X			NSEW					X								X		
137	OXYGEN TANK AREA		X							X			NSEW					X								X		

DOOR AND FRAME SCHEDULE

NUMBER	DOOR: SIZE WIDTH X HEIGHT	DOOR: MATERIAL	DOOR: DOOR TYPE (see door and frame types)	DOOR: LITE SIZE	FRAME: MATERIAL	FRAME: FRAME TYPE	FRAME: LITE SIZE	FRAME: DETAILS HEAD	FRAME: DETAILS JAMB	FIRE RATING	HARDWARE SET NUMBER	REMARKS
101A	12'-0" x 7'-0"	AL	HS	Full	AL	S	Full	26/A703	03/A301 SIM	None	1	Notes: Door numbers are designated on floor plans A100's. Refer to detail for door and frame types.
101B	12'-0" X 7'-0"	AL	HS	Full	AL	S	Full	26/A703	21/A301 SIM	None	2	
104A	3'-0" x 7'-0"	WD	FS	None	HM	S	None	21/A301	21/A301	None	6	
104B	3'-0" x 7'-0"	FG	FS	None	HM	S	None	32/A301	32/A301	None	5	
105	3'-0" x 7'-0"	WD	FS	None	HM	S	None	21/A301	21/A301	None	7	
106	3'-0" x 7'-0"	WD	FS	None	HM	S	None	21/A301	21/A301	None	8	
108	3'-0" x 7'-0"	IHM	FS	None	HM	S	None	04/A301	04/A301	None	3	
109	3'-0" x 7'-0"	WD	FS	None	HM	S	None	21/A301	21/A301	None	11	
110	3'-0" x 7'-0"	WD	FS	None	HM	S	None	21/A301	21/A301	None	11	
111	3'-0" x 7'-0"	WD	FS	None	HM	S	None	21/A301	21/A301	None	10	
112	3'-0" x 7'-0"	WD	FS	None	HM	S	None	21/A301	21/A301	None	12	
114	3'-0" x 7'-0"	WD	FS	None	HM	S	None	21/A301	21/A301	None	10	
115	3'-0" x 7'-0"	WD	FS	None	HM	S	None	21/A301	21/A301	None	12	
117	9'-0" X 7'-0"	AL	HS	Full	AL	S	None	32/A301	32/A301	None	1	
118	3'-0" x 7'-0"	WD	FS	None	HM	S	None	21/A301	21/A301	None	8	
119	3'-0" x 7'-0"	WD	FS	None	HM	S	None	21/A301	21/A301	None	8	
120	3'-0" x 7'-0"	WD	FS	None	HM	S	None	21/A301	21/A301	None	8	
121	3'-0" x 7'-0"	HM	FS	None	HM	S	None	32/A301	32/A301	None	8	
122	3'-0" x 7'-0"	HM	FS	None	HM	S	None	32/A301	32/A301	None	8	
123	3'-0" x 7'-0"	HM	FS	None	HM	S	None	32/A301	32/A301	None	9	
124	3'-0" x 7'-0"	HM	FS	None	HM	S	None	32/A301	32/A301	None	9	
102	3'-0" x 7'-0"	HM	FS	None	HM	S	None	32/A301	32/A301	None	4	
125	3'-0" x 7'-0"	IFG	FS	None	HM	S	None	31/A301	31/A301	None	13	
126A	3'-0" x 7'-0"	IFG	FS	None	HM	S	None	31/A301	31/A301	None	11	
126B	3'-0" x 7'-0"	HM	FS	None	HM	S	None	28/A301	28/A301	None	17	
126C	3'-0" x 7'-0"	HM	FS	None	HM	S	None	28/A301	28/A301	None	17	
127A	3'-0" x 7'-0"	IHM	FS	None	HM	S	None	27/A301	27/A301	None	11	
127B	(2) 3'-0" x 7'-0"	IHM	FS	None	HM	S	None	27/A301	27/A301	None	15	
127C	(2) 3'-0" x 7'-0"	IHM	FS	None	HM	S	None	27/A301	27/A301	None	15	
128	(2) 3'-0" x 7'-0"	HM	FS	None	HM	S	None	28/A301	28/A301	None	18	
129	3'-0" x 7'-0"	HM	FS	None	HM	S	None	28/A301	28/A301	None	11	
130A	3'-0" x 7'-0"	HM	FS	None	HM	S	None	28/A301	28/A301	None	16	
130B	(2) 3'-0" x 7'-0"	IHM	FS	None	HM	S	None	27/A301	27/A301	None	15	
131A	3'-0" x 7'-0"	HM	FS	None	HM	S	None	28/A301	28/A301	None	16	
131B	(2) 3'-0" x 7'-0"	IHM	FS	None	HM	S	None	27/A301	27/A301	None	15	
132	3'-0" x 7'-0"	HM	FS	None	HM	S	None	28/A301	28/A301	None	17	
133	3'-0" x 7'-0"	HM	FS	None	HM	S	None	28/A301	28/A301	None	14	
134	(2) 3'-0" x 7'-0"	IHM	FS	None	HM	S	None	27/A301	27/A301	None	14	
135C	(2) 3'-0" x 7'-0"	HM	FS	None	HM	S	None	N/A	N/A	None	16	
137A	(2) 3'-0" x 7'-0"	HM	FS	None	HM	S	None	N/A	N/A	None	16	

DOOR AND FRAME MATERIAL LEGEND

Finishes | Door Styles | Frame Styles

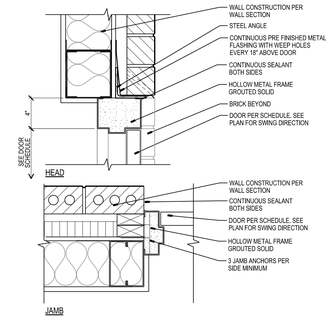

04 A301 EXTERIOR HOLLOW METAL DOOR FRAME DETAILS AT METAL STUD WALL

SCALE: 1.1/2"=1'-0"

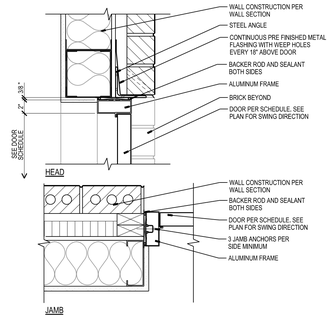

03 A301 EXTERIOR ALUMINUM DOOR FRAME DETAILS AT METAL STUD WALL

SCALE: 1.1/2"=1'-0"

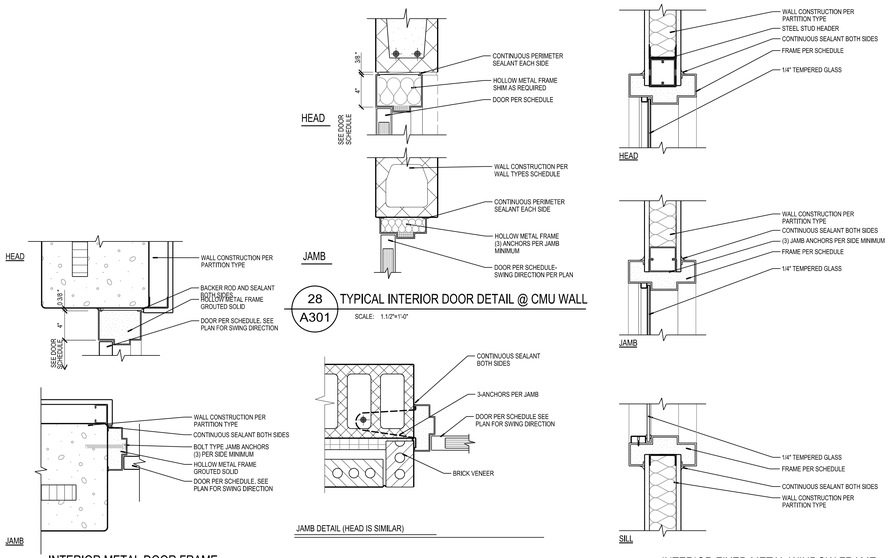

32 A301 INTERIOR METAL DOOR FRAME DETAILS AT PRECAST WALL

SCALE: 1.1/2"=1'-0"

27 A301 EXTERIOR CMU WALL @ MASONRY

SCALE: 1.1/2"=1'-0"

22 A301 INTERIOR FIXED METAL WINDOW FRAME DETAILS AT METAL STUD WALL

SCALE: 1.1/2"=1'-0"

31 A301 INTERIOR METAL DOOR FRAME DETAILS AT PRECAST WALL

SCALE: 1.1/2"=1'-0"

26 A301 HOLLOW METAL FRAME AT FURRED WALL

SCALE: 1.1/2"=1'-0"

21 A301 INTERIOR METAL DOOR FRAME DETAILS AT METAL STUD WALL

SCALE: 1.1/2"=1'-0"

WINDOW TYPES

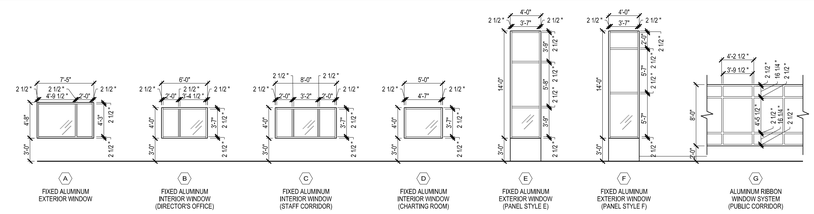

FRAME TYPES

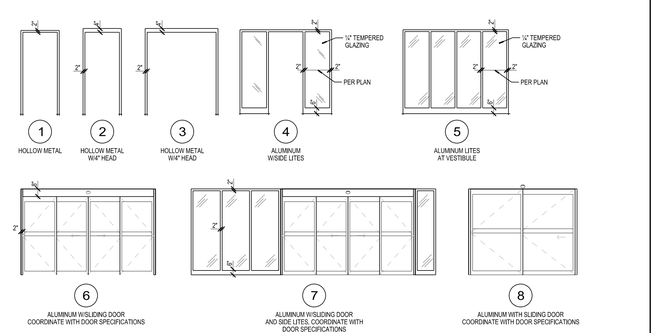

DOOR TYPES

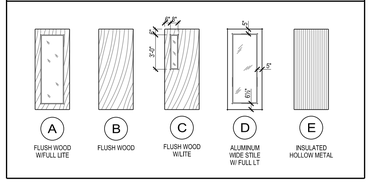

Angus Young
Architecture | Engineering
Interiors | Landscape
www.angusyoung.com
555 South River Street
Janesville, WI
608.756.2326
16 N. Carroll Street Suite 610
Madison, WI
608.284.8225

North Central Health Care

MARATHON COUNTY

MKM architecture + design
RAMAKER & ASSOCIATES, INC.
RING & DUCHATEAU

OWNERS:
MARATHON COUNTY
500 FOREST STREET
WAUSAU, WI 54403
CONTACT: MICHAEL LOTTER
EMAIL: MICHEL.LOTTER@COMMTHOUR.US
PHONE: 715-261-6860

ARCHITECTS:
ANGUS YOUNG ASSOCIATES, INC.
555 SOUTH RIVER STREET
JANESVILLE, WI 53548
CONTACT: JIM TIBBETTS, AIA
EMAIL: JIMT@ANGUSYOUNG.COM
PHONE: 608-756-2326

ARCHITECTS:
MKM ARCHITECTURE + DESIGN
119 W. WAYNE STREET
FORT WAYNE, IN 46802
CONTACT: DODD KATTMAN, AIA
EMAIL: DKATTMAN@MKMDESIGN.COM
PHONE: 260-422-5763

MECHANICAL, ELECTRICAL & PLUMBING:
RING & DUCHATEAU, LLP
11400 W. CAPITOL DRIVE
BROOKFIELD, WI 53045
CONTACT: JASON LAROSH
EMAIL: JLAROSH@RINGDU.COM
PHONE: 414-775-7430

STRUCTURAL & AQUATICS:
RAMAKER & ASSOCIATES, INC.
855 COMMUNITY DRIVE
SAUK CITY, WI 53583
CONTACT: ERIC KAUL
EMAIL: EKAUL@RAMAKER.COM
PHONE: 608-643-4100

MARATHON COUNTY & NORTH CENTRAL HEALTH CARE

AQUATIC THERAPY CENTER

1100 LAKE VIEW DRIVE
WAUSAU, WI 54403

ISSUANCES / REVISIONS

NO:	DESCRIPTION:	DATE:
0	CONSTRUCTION BID SET	06.17.2019

Due to electronic distribution, this drawing may not be printed to the scale indicated on the drawings. Do NOT use scale to determine dimensions or sizes.

No part of this drawing may be used or reproduced in any form or by any means, or stored in a database or retrieval system, without prior written permission of.

ANGUS YOUNG ASSOCIATES, INC.
Copyright © 2018 All Rights Reserved

PROJECT NUMBER
65361

APPROVED BY
JT

REVIEWED BY
JT

DRAWN BY
FM

ROOM FINISH, DOOR SCHEDULES AND DETAILS

A301