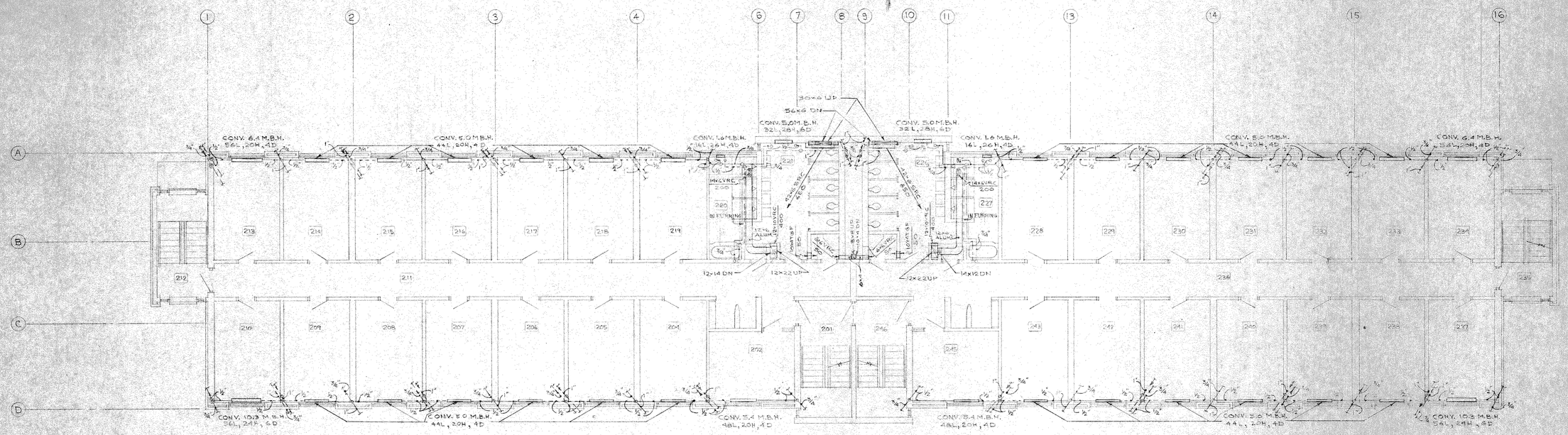

SECOND FLOOR PLAN

1/8" = 1'-0"

NOTES

1- ALL GATE VALVES ARE TO BE RISING STEM VALVES WITH STEM VERTICALLY UPWARD OR 45° ABOVE THE HORIZONTAL AXIS.

2- NO GRILLE OR PORTION THEREOF SHALL PROJECT VERTICALLY INTO THE AIR STREAM.

3- ALL STRAINERS AND SWING CHECK VALVES SHALL BE INSTALLED IN HORIZONTAL LINES.

4- ALL PIPING SHALL PITCH 1" IN 40' DOWNWARD FROM VENT VALVE OR FROM RADIATION WHICH IS ABOVE PIPING.

5- ALL PIPING TO BE SECURELY SUPPORTED AND INDIVIDUALLY SUSPENDED.

6- ALL EQUIPMENT SHALL BE SUSPENDED ABOVE THE FLOOR BASE.

7- ALL DUCT DIMENSIONS SHOWN ARE FINISHED INSIDE DIMENSIONS.

8- EACH AND EVERY HEATING ELEMENT AND HEATING COIL TO HAVE STOP COCK AND HAND VENT.

9- ALL WALL OPENINGS SHALL BE OF SUCH DIMENSION THAT BOTTOM CABINET FLANGE CLEARS THE BASE. FOR SEMI-RECESSED AND RECESSED EQUIPMENT.

SYMBOL SCHEDULE

	VENT OR RETURN AIR DUCT
	OUTSIDE OR SUPPLY AIR DUCT
CAB. U.H.	CABINET UNIT HEATER
W.F.	WALL FIN
B.B.	BASEBOARD
CONV.	CONVECTOR
U.V.	UNIT VENTILATOR
H.&V.	HEATING & VENTILATING UNIT
V.C.D.	VOLUME CONTROL DAMPER
S.D.	SPLITTER DAMPER
T.S.F.	TRANSFER GRILLE AT FLOOR
S.R.C.	SUPPLY REGISTER AT CEILING
V.R.C.	VENT REGISTER AT CEILING
V.G.C.	VENT GRILLE AT CEILING
(2)	DOOR GRILLE (NO. INDICATES MIN FT² FREE AREA)
R.G.C.	RETURN GRILLE AT CEILING
T	THERMOMETER
P	PRESSURE GAUGE
T	THERMOSTAT
	HOT WATER SUPPLY
	HOT WATER RETURN
	INDICATES 45° OR 90° OFF TOP
	INDICATES 45° OFF BOTTOM
	INDICATES 90° OFF BOTTOM
	GATE VALVE
	GLOBE VALVE
	FLOW CONTROL VALVE
	UNION
	DIRT STRAINER
	ANCHOR
	EXPANSION JOINT
	TEMPERATURE CONTROL VALVE
	3 WAY MIXING VALVE
	AIR VENT OR RELIEF VALVE
	PRESSURE REDUCING VALVE
	STOP COCK

OLSEN and ASSOCIATES
CONSULTING ENGINEERS
1471

SECOND FLOOR HEATING PLAN
SYMBOL SCHEDULE

COMM. #7056

DORMITORY BUILDING
UNIVERSITY OF WISCONSIN
MARATHON COUNTY CAMPUS
WAUSAU, WISCONSIN

NELSON Associates Architects
WAUSAU, WISCONSIN

DATE 11-7-67
DRAWN H.O.
CHECKED LAS

SHEET H V-3

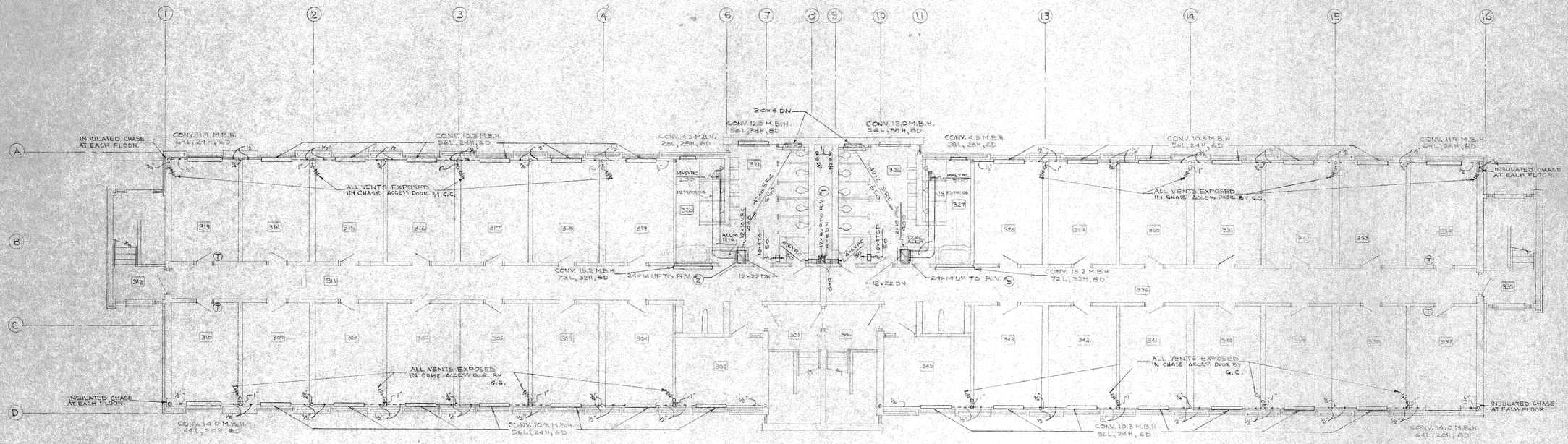

THIRD FLOOR PLAN
1/8" = 1'-0"

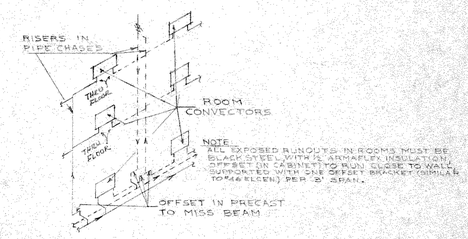

TYPICAL RISER DETAIL
NO SCALE

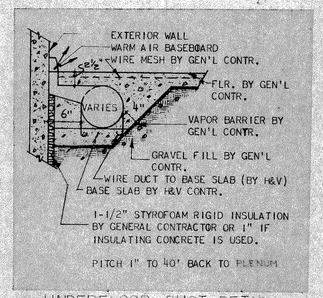

UNDERFLOOR DUCT DETAIL
NO SCALE

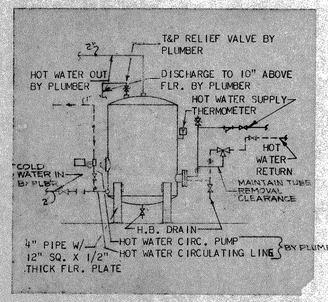

HOT WATER STORAGE TANK CONNECTION DETAIL

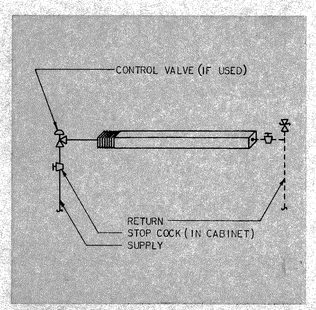

CONVECTOR, WALL FIN, CAB. UNIT HEATER CONNECTION DETAIL

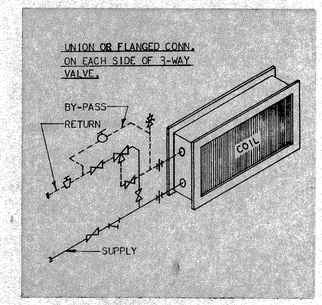

UNIT VENTILATOR COIL CONNECTION DETAIL

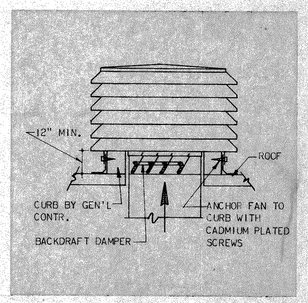

ROOF VENTILATOR DETAIL

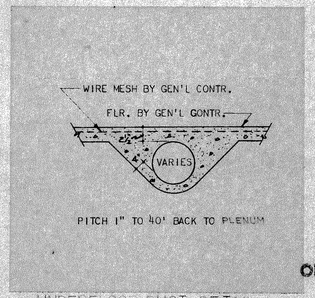

UNDERFLOOR DUCT DETAIL (INTERIOR)
NO SCALE

OLSEN and ASSOCIATES
CONSULTING ENGINEERS
1471

THIRD FLOOR HEATING PLAN
EQUIPMENT CONNECTION DETAILS

COMM. #7056

DORMITORY BUILDING
UNIVERSITY OF WISCONSIN
MARATHON COUNTY CAMPUS
WAUSAU, WISCONSIN

NELSON Associates Architects
WAUSAU, WISCONSIN

DATE 11-7-67
DRAWN H.O.
CHECKED L.A.S.

SHEET H V-1

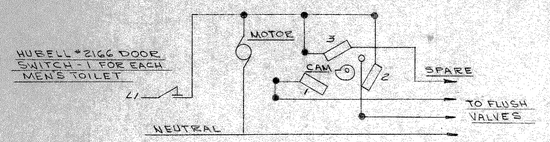

URINAL TIMER SCHEMATIC DIAGRAM
NOTE - P

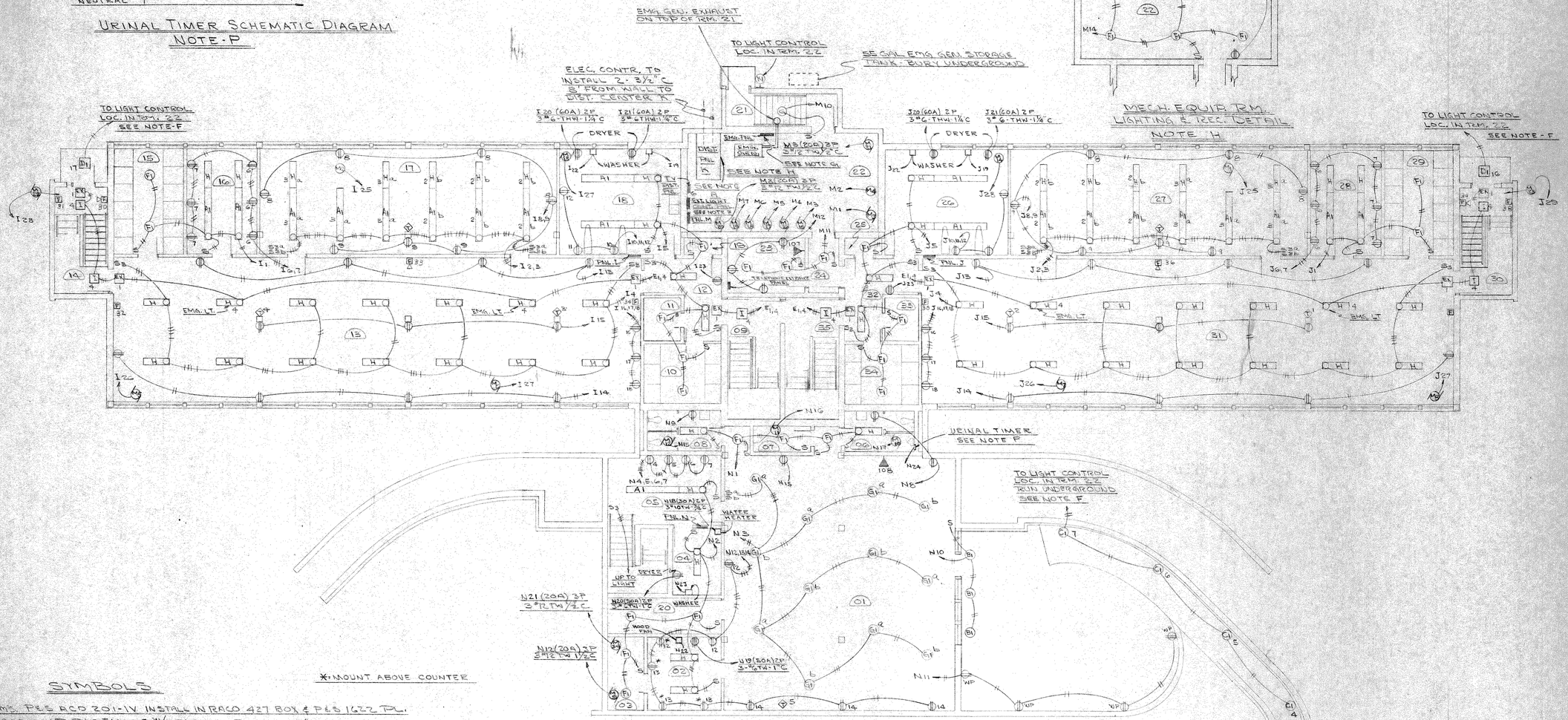

BASEMENT FLOOR ELECTRICAL PLAN
SCALE 1/8" = 1'-0"

NORTH

* MOUNT ABOVE COUNTER

SYMBOLS

S - IN STUDENT RMS. P&S RCD 301-1V. INSTALL IN RACO 427 BOX & P&S 1622 PL.
S - IN ALL OTHER AREAS. 1P P&S #1021-I W/ STAINLESS PL. MT. 48" FROM FL.
Ss SWITCH - 3 WAY. P&S #1023-I W/ STAINLESS PL. MT. 48" FROM FL.
RES. - P&S #6200-I W/ STAINLESS PL. MT. 12" FROM FL.
RES. - KITCHEN - P&S #6300-1 W/ STAINLESS PL. MT. 12" FROM FL. EXC. WHERE NOTED OTHERWISE
RES. - P&S #3846 - W/ STAINLESS PL. - MT. 12" FROM FL.
TV OUTLET STD. SWITCH BOX W/ S.S PL. MT. 18" FROM FL.
MOTOR
FIRE ALARM STATION - STANDARD #700 MT'D. 55" FROM FLR
FIRE ALARM HORN - STANDARD #4-350-F MT'D. 7' FROM FLR
FIXTURE WALL MT. - MT. 8' FROM GROUND
TELEPHONE OUTLET - STD. BOX WITH S.S BUSHED PLATE
DOOR CHIME PUSH BUTTON

SYMBOLS
BASEMENT ELECTRICAL PLAN

COMM. #7056

DORMITORY BUILDING
UNIVERSITY OF WISCONSIN
MARATHON COUNTY CAMPUS
WAUSAU, WIS.

NELSON Associates Architects
WAUSAU, WISCONSIN

DATE 11-7-67
DRAWN JJM
CHECKED

SHEET E-1

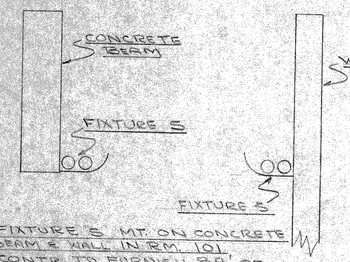

FIXTURE S MT. ON CONCRETE BEAM & WALL IN RM. 101
CONTR. TO FURNISH 39' OF LIGHTRITE 1782 COVE LIGHTING
NOTE C

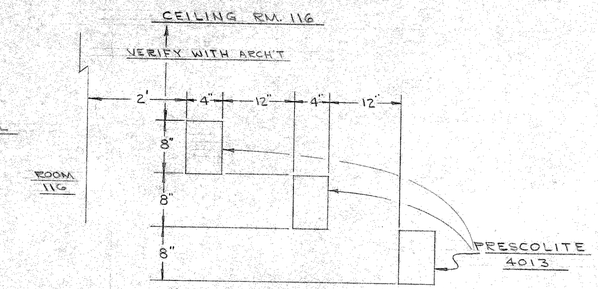

NOTE - E
NO SCALE

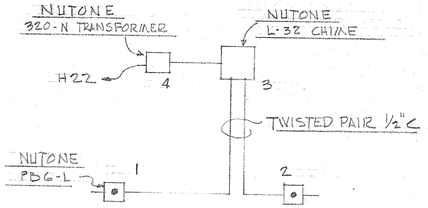

NOTE 'R'
NO SCALE

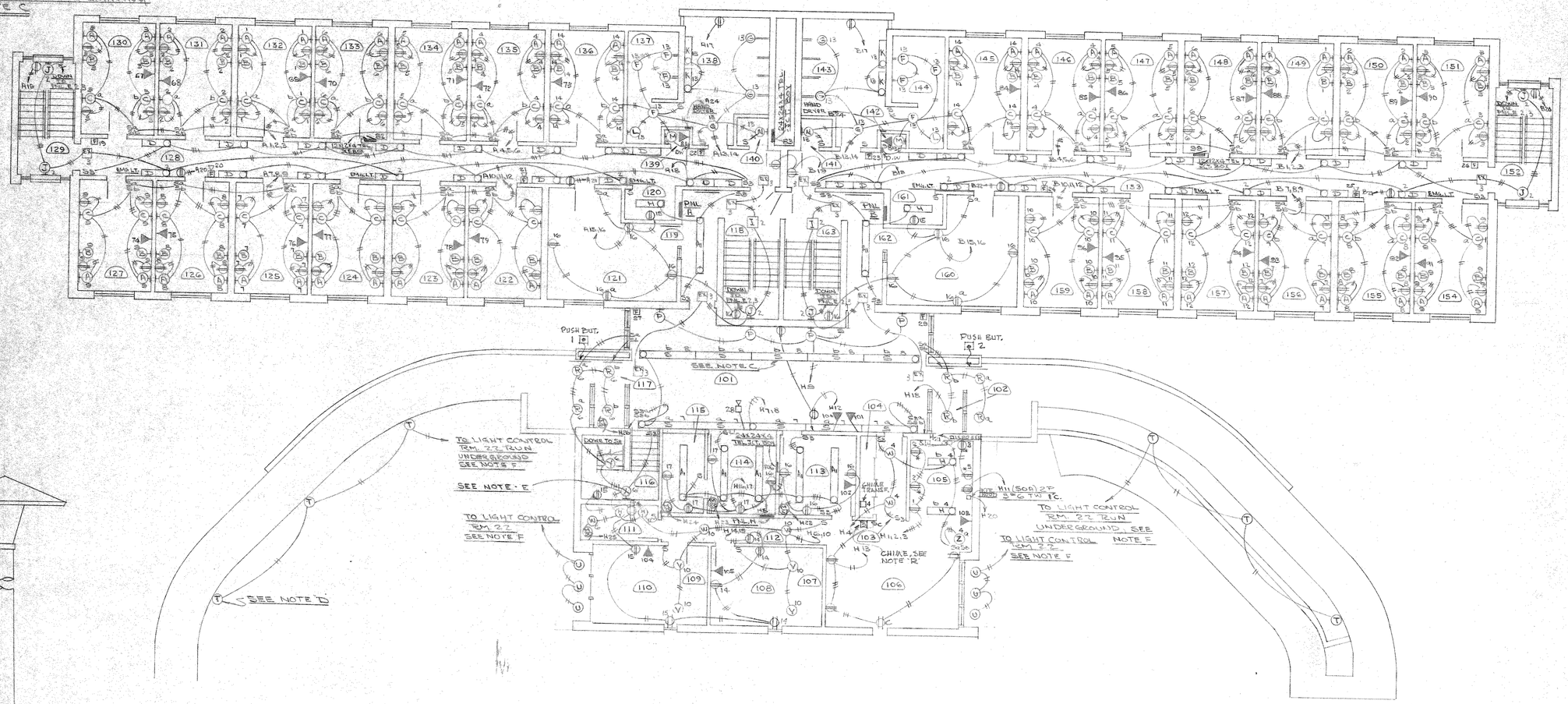

- FIRST FLOOR ELECTRICAL PLAN -

NORTH

SCALE 1/8" = 1'-0"

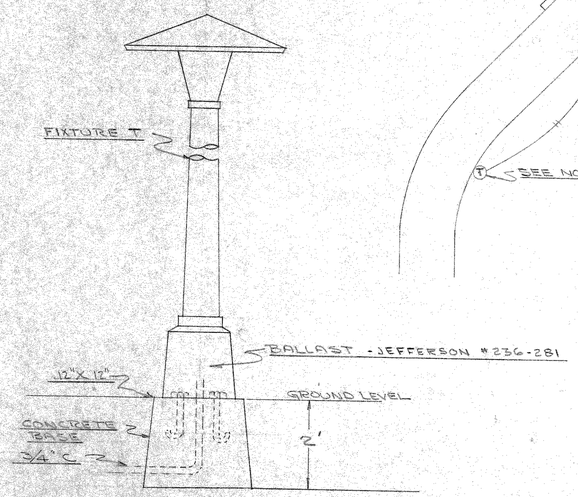

NOTE 'D'
NO SCALE

FIRST FLOOR ELECTRICAL PLAN
POST LAMP DETAIL

COMM. #7056

DORMITORY BUILDING
UNIVERSITY OF WISCONSIN
MARATHON COUNTY CAMPUS
WAUSAU, WISCONSIN

NELSON Associates Architects
WAUSAU WISCONSIN

DATE 11-9-67
DRAWN JTM
CHECKED

SHEET E-2

WISCONSIN CHARLES M. SCHAPP REGISTERED PROFESSIONAL ENGINEER

IN PRODUCTS CO. 1000H 300-4-67